# BF02K

| 1 | 2 | 3 | 4 | 3 |
|---|---|---|---|---|
| GL1799 | GL1797 | **VITE TBEI M5x20mm**<br>SCREW<br>VIS<br>SCHRAUBE<br>TORNILLO | **VITE TBEI M5x40mm**<br>SCREW<br>VIS<br>SCHRAUBE<br>TORNILLO | **PARTICOLARI INCLUSI NELLA BORSA TANKLOCK**<br>COMPONENTS INCLUDED IN THE TANKLOCK BAG<br>PIÈCES INCLUES DANS LA TANKLOCK BAG<br>TEILE INKLUDIERT IN DER TANKLOCK TASCHE<br>DESPIECES INCLUIDOS EN LA TANKLOCK BAG |
| **Q.TY n.1** | **Q.TY n.1** | **Q.TY n.2** | **Q.TY n.3** | |

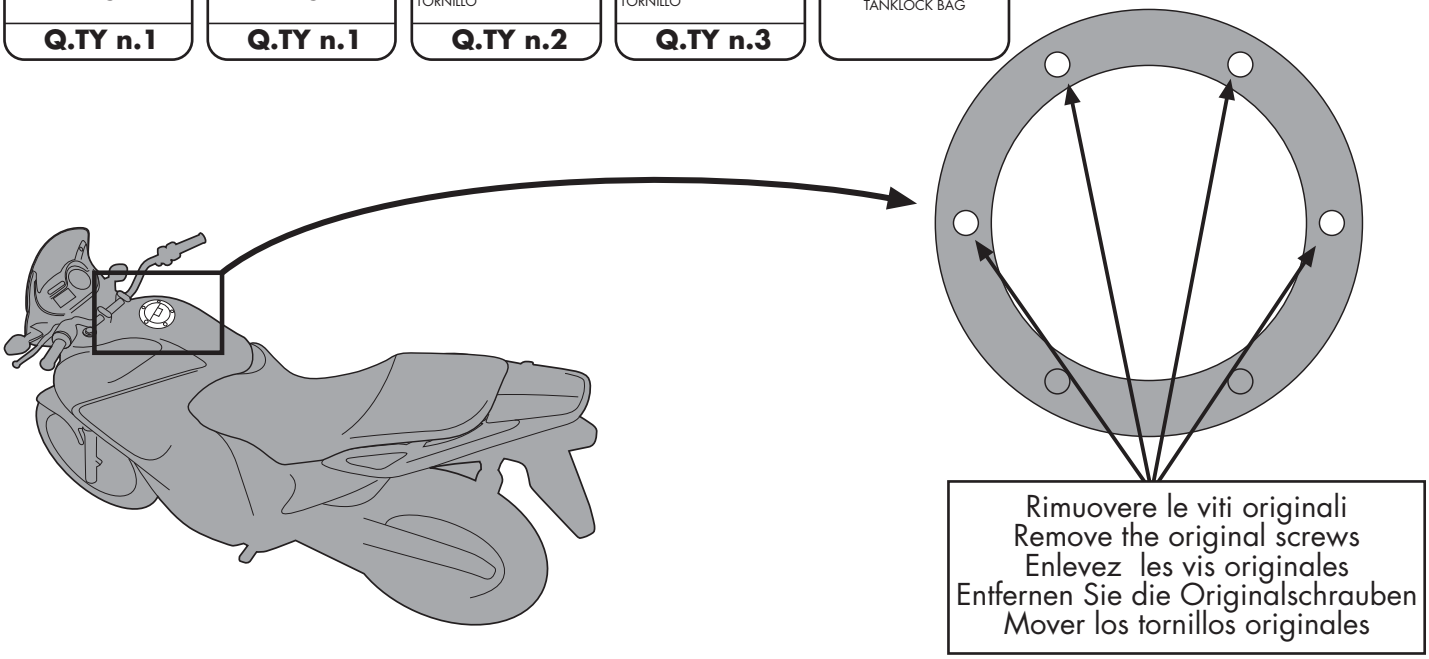


**SPEED TRIPLE 1050**
**SPRINT ST 1050**
**TIGER 1050**

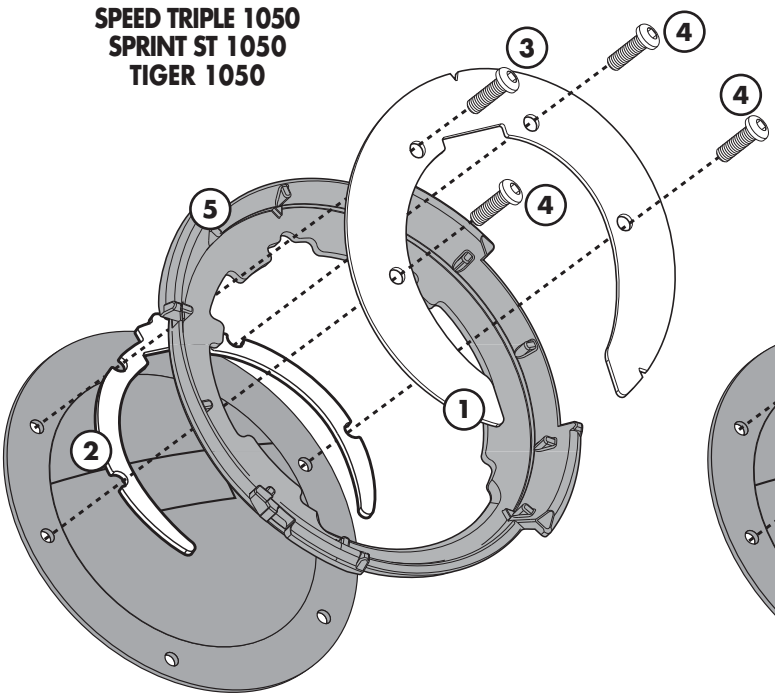


**STREET TRIPLE 675**
**DAYTONA 675**

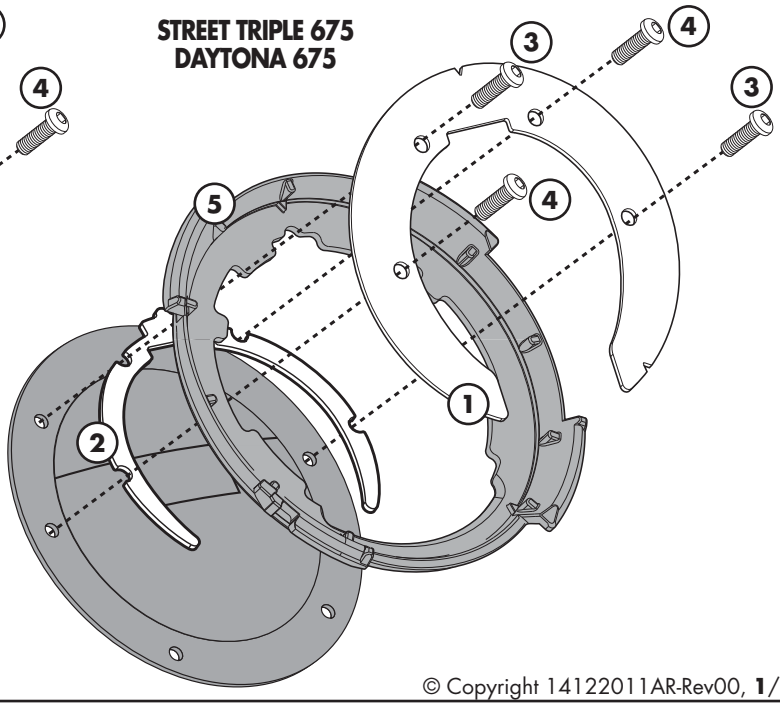


© Copyright 14122011AR-Rev00, **1**/1